NZXT

H510 ELITE

MID-TOWER

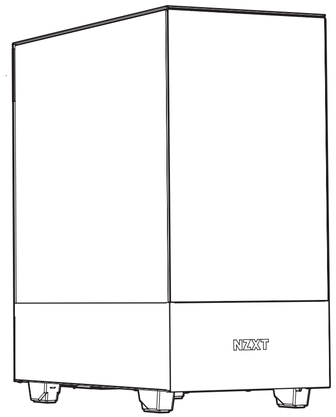

POWERED BY
NZXT CAM

EXPLODED VIEW

VISTA EXPLOSIONADA
VUE EN ÉCLATÉ
EXPLOSIONSDARSTELLUNG
VEDUTA IN ESPLOSO
VISTA EXPLODIDA
ТРЕХМЕРНОЕ ПРЕДСТАВЛЕНИЕ ДЕТАЛЕЙ
展开图
部件分解图
部件分解圖

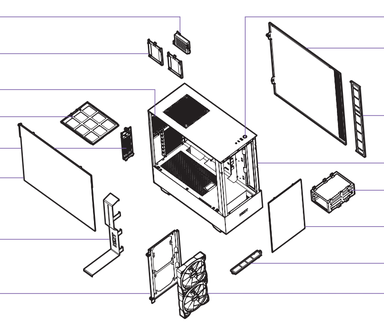

1. Dispositivo inteligente V2
2. Bandeja unidad de estado sólido
3. Tira LED RGB superior
4. Filtro de polvo de la PSU
5. Soporte vertical para GPU
6. Panel de vidrio templado lateral izquierdo
7. Barra de limpieza
8. Soporte del refrigerador frontal
9. E/S frontal
10. Panel metálico derecho
11. Filtro antipolvo delantero derecho
12. Chasis
13. Compartimento de disco rígido
14. Panel frontal de vidrio templado
15. Filtro antipolvo delantero (bajo)
16. Ventilador Aer RGB 2 140mm

1. Smart Device V2
2. Plateau SSD
3. Bande LED RVB du dessus
4. Filtre à poussière du bloc d'alimentation
5. Support vertical GPU
6. Panneau latéral gauche en verre trempé
7. Barre pour la gestion des câbles
8. Support du dissipateur avant
9. E/S avant
10. Panneau métallique droit
11. Filtre à poussière avant droit
12. Châssis
13. Plateau pour disque dur
14. Panneau avant en verre trempé
15. Filtre à poussière avant (dessous)
16. Ventilateur Aer RGB 2 140mm

1. Smart Device V2
2. SSD-Fach
3. RGB-LED-Streifen an Oberseite
4. Netzteil-Staubfilter
5. Vertikale GPU-Halterung
6. Hartglasfenster links
7. Reinigungsleiste
8. Kühlerhalterung an Vorderseite
9. E/A an der Vorderseite
10. Seitliche Abdeckung rechts aus Metall
11. Staubfilter vorne rechts
12. Gehäuse
13. Festplatteneinsatz
14. Frontplatte aus gehärtetem Glas
15. Staubfilter Unterseite vorne
16. Aer RGB 2 140mm Lüfter

1. Dispositivo inteligente V2
2. Cassetto SDD
3. Striscia LED RGB superiore
4. Filtro polvere alimentatore
5. Supporto Verticale per GPU
6. Pannello laterale sinistro in vetro temperato
7. Barra di gestione dei cavi
8. Staffa raffreddamento anteriore
9. I/O anteriore
10. Pannello destro in metallo
11. Filtro antipolvere frontale destro
12. Chassis
13. Cassetto HDD
14. Vetro frontale temperato
15. Filtro antipolvere frontale inferiore
16. Aer RGB 2 140mm Ventola

1. Dispositivo inteligente V2
2. Tabuleiro de SSD
3. Tira de LED RGB da parte superior
4. Filtro de pó do PSU
5. Montagem Vertical GPU
6. Vidro temperado do painel lateral esquerdo
7. Barra de limpeza
8. Suporte da ventoinha frontal
9. E/S frontal
10. Painel de metal direito
11. Filtro de pó do lado direito da frente
12. Chassi
13. Bandeja de unidade de disco duro
14. Vidro temperado do painel frontal
15. Filtro de pó do fundo da frente
16. Ventilador Aer RGB 2 140mm

1. Интеллектуальное устройство V2
2. Лоток для твердотельных накопителей
3. Верхняя светодиодная лента RGB
4. Пылевой фильтр блока питания
5. Вертикальное крепление графического процессора
6. Левая боковая панель из закаленного стекла
7. Панель Clean sweep
8. Кронштейн передней системы охлаждения
9. Разъемы спереди
10. Правая металлическая панель
11. Передний правый воздушный фильтр
12. Корпус
13. Лоток для жесткого диска
14. Передняя панель из закаленного стекла
15. Передний нижний воздушный фильтр
16. Вентилятор Aer RGB 2 140мм

1. スマートデバイス V2
2. SSDトレイ
3. トップRGB LEDストリップ
4. PSUダストフィルター
5. 直立ディスプレイカードの取り付け
6. 左サイド強化ガラスパネル
7. クリーン保持具
8. フロントクーラーブラケット
9. フロントI/O
10. 右サイド金属パネル
11. フロントライト・ダストフィルター
12. シャーシ
13. ハードドライブトレイ
14. フロントパネル強化ガラス
15. フロントボトムダストフィルター
16. AER RGB 2 140mmファン

1. 智能设备 V2
2. SSD架
3. 顶部 RGB LED 灯带
4. PSU 防尘过滤器
5. 直立显示卡安装
6. 左侧钢化玻璃板
7. 理线板
8. 前端冷却器支架
9. 前端 I/O
10. 右侧金属板
11. 前板右侧防尘网
12. 机箱
13. 硬盘架
14. 前面板钢化玻璃
15. 前板底部防尘网
16. AER RGB 2 140mm风扇

1. 스마트 장치 V2
2. SSD 트레이
3. 상단 RGB LED 스트립
4. PSU 먼지 필터
5. 그래픽카드 세로 장착
6. 좌측 강화 유리 사이드 패널
7. 케이블 정리 바
8. 전면 쿨러 브래킷
9. 전면 I/O
10. 우측 메탈 패널
11. 전면 우측 먼지 필터
12. 섀시
13. HDD 트레이
14. 전면 패널 강화 유리
15. 전면 하단 먼지 필터
16. Aer RGB 2 140mm 팬

COMPONENT LIST

LISTA DE COMPONENTES
LISTE DES COMPOSANTS
KOMPONENTENLISTE
ELENCO DEI COMPONENTI
LISTA DE COMPONENTES
СПИСОК КОМПОНЕНТОВ
コ ポ ネ ン ト 一 覧 表
部品列表
零件表
零件表

A Thumb Screw 6-32 x 6mm

x1
Installed x1
Accessory Box x8

B Special Thumb Screw 6-32 x 6mm

x4
Installed x4
Accessory Box x8

C Hexagon Screw 6-32 x 6mm

x4
Installed x0
Accessory Box x4

D Screw 6-32 x 5mm

x21
Installed x0
Accessory Box x21

E Screw M3 x 5mm

x12
Installed x0
Accessory Box x12

A. Thumb screw 6-32 x 6mm	Extension slots installation
B. Special thumb screw 6-32 x 6mm	Side panel, Fan bracket, Vertical GPU Mount
C. Hexagon screw 6-32 x 6mm	Power supply installation
D. Screw 6-32 x 5mm	Motherboard installation, 3.5 hard drive installation, PCI Device installation
E. Screw M3 x 5mm	2.5 hard drive installation
F. Screw KB5 x 10mm	Fan installation
G. Standoff 6-32 x 6.5+4mm	Motherboard installation
H. Position standoff 6-32x 6.5+4mm	Motherboard installation
I. Standoff Wrench	Motherboard installation
J. Cable tie	Cable management
K. Breakout Cable	For Non-Intel Standard F_Panel Header Use
L. 3.5mm Headset Audio Jack splitter	Convert single 3.5mm 4 poles audio port to two 3.5mm 3 poles audio ports

F Screw KB5 x 10mm

x16
Installed x8
Accessory Box x8

G Standoff 6-32 x 6.5+4mm

x9
Installed x8
Accessory Box x1

H Position Standoff 6-32x 6.5+4mm

x1
Installed x1
Accessory Box x0

I Standoff Wrench

x1
Installed x0
Accessory Box x1

J Cable Tie

x10
Installed x0
Accessory Box x10

K Breakout Cable

x1
Installed x0
Accessory Box x1

L 3.5mm Headset audio jack splitter

x1
Installed x0
Accessory Box x1

A. Tornillo de apriete manual de 6-32 x 6 mm	Instalación de ranuras de extensión
B. Tornillo de apriete manual especial de 6-32 x 6 mm	Panel lateral, Soporte para ventilador, Soporte vertical para GPU
C. Tornillo hexagonal de 6-32 x 6 mm	Instalación de la fuente de alimentación
D. Tornillo de 6-32 x 5 mm	Instalación de la placa base e instalación de la unidad de disco duro de 3,5",
E. Tornillo M3 x 5mm	Instalación de dispositivo PCI
F. Tornillo KB5 x 10 mm	Instalación de la unidad de disco duro de 2,5"
G. Separador 6-32 x 6,5 +4 mm	Instalación del ventilador
H. Separador de posicionamiento 6-32 x 6,5+4 mm	Instalación de la placa base
I. Llave para separadores	Instalación de la placa base
J. Brida para cables	Administración de los cables
K. Cable multiconector	Para panel frontal de placas base no Intel.
L. Divisor del conector de audio de los auriculares de 3.5mm	Convierta un solo puerto de audio de 3.5 mm y 4 polos en dos puertos de audio de 3.5 mm y 3 polos

A. Vis à serrage à main 6-32 x 6 mm	Installation des emplacements d'extension
B. Vis à serrage à main spéciale 6-32 x 6 mm	Panneau latéral, Support de Ventilateur, Support GPU Vertical
C. Vis hexagonale 6-32 x 6 mm	Installation de l'alimentation électrique
D. Vis 6-32 x 5 mm	Installation de la carte mère, installation du disque dur 3,5",
E. Vis M3 x 5 mm	Dispositif d'installation PCI
F. Vis KB5 x 10 mm	Installation du disque dur 2,5"
G. Entretoise 6-32 x 6,5 + 4 mm	Installation du ventilateur
H. Support de montage 6-32 x 6,5+4 mm	Installation de la carte mère
I. Clé pour entretoise	Installation de la carte mère
J. Attache-câble	Gestion du câblage
K. Câble multi connexions	Pour le connecteur Front Panel de cartes mères non-intel
L. Répartiteur audio jack 3,5 mm pour casque	Convertissez un seul port audio 3,5 mm à 4 pôles en deux ports audio 3,5 mm à 3 pôles

A. Rändelschraube 6 – 32 x 6 mm	Installation von Erweiterungssteckplätzen
B. Spezielle Rändelschraube 6 – 32 x 6 mm	Seitenteil, Lüfterhalterung, Vertikale GPU-Halterung
C. Sechskantschraube 6 – 32 x 6 mm	Netzteilinstallation
D. Schraube 6 – 32 x 5 mm	Installation von Mainboard-Installation, 3,5-Zoll-Festplatteninstallation, PCI-Geräteinstallation
E. Schraube M3 x 5 mm	2,5-Zoll-Festplatteninstallation
F. Schraube KB5 x 10 mm	Lüfterinstallation
G. Abstandhalter 6 – 32 x 6,5 + 4 mm	Motherboard-Installation
H. Abstandshalter 6-32 x 6,5+4mm positionieren	Motherboard-Installation
I. Abstandhalter-Schlüssel	Motherboard-Installation
J. Kabelbinder	Kabelverwaltung
K. Kabelpatsche	Front Panel Header für alle gängigen nicht-Intel Mainboards
L. 3,5 mm Kopfhörer-Audio-Splitter	Wandeln Sie einen einzelnen 3,5 mm-4-Pol-Audioport in zwei 3,5-mm-3-Pol-Audioports um

A. Vite a testa zigrinata 6-32 x 6 mm	Installazione alloggi d'espansione
B. Vite a testa zigrinata speciale 6 x 6 mm	Pannello laterale, Supporto per i fan, Supporto verticale per GPU
C. Vite esagonale 6-32 x 6 mm	Installazione dell'alimentatore
D. Vite 6-32 x 5 mm	Installazione della scheda madre, installazione HDD 3.5",
E. Vite M3 x 5 mm	Installazione del dispositivo PCI
F. Vite KB5 x 10 mm	Installazione HDD 2.5"
G. Distanziatore 6-32 x 6,5 + 4 mm	Installazione della ventola
H. Distanziatore 6-32 x 6,5 + 4 mm	Installazione della scheda madre
I. Chiave per distanziatori	Installazione della scheda madre
J. Fascetta per cavi	Installazione della scheda madre
K. Cavo multiconnessione	Connettore F_Panel per Mainboard non Intel
L. Splitter per jack audio 3,5 mm	Convertì singola porta audio da 3,5 mm a 4 poli in due porte audio da 3,5 mm a 3 poli

A. Parafusos borboleta 6-32 x 6 mm	Instalação das ranhuras de extensão
B. Parafusos de borboleta 6-32 x 6 mm	painel lateral, Suporte para Fan, Montagem Vertical GPU
C. Parafusos hexagonais 6-32 x 6 mm	Instalação da fonte de alimentação
D. Parafusos 6-32 x 5 mm	Instalação da placa principal, instalação da unidade de 3,5",
E. Parafusos M3 x 5 mm	Instalação do dispositivo PCI
F. Parafusos KB5 x 10 mm	Instalação da unidade de 2,5"
G. Separadores 6-32 x 6,5+4 mm	Instalação do ventilador
H. Separadores 6-32 x 6,5+4 mm	Instalação da placa principal
I. Chave para separador	Instalação da placa principal
J. Braçadeira para cabos	Gestão de cabos
K. Cabo divisor	Para ligação do painel frontal (F-Panel) em placa-mãe padrão não-Intel
L. Divisor de jack de áudio de 3,5 mm	Converta uma única porta de áudio de 4 polos de 3,5 mm em duas portas de áudio de 3 polos de 3,5 mm

A. Винт с барашком 6-32 x 6 мм	Разъемов расширения
B. Специальный винт с барашком 6-32 x 6 мм	боковая панель, Кронштейн вентилятора, Вертикальное
C. Винт шестигранный 6-32 x 6 мм	Установка источника питания
D. Винт 6-32 x 5 мм	Установка материнской платы, установка жесткого диска 3,5", Установка устройства PCI
E. Винт M3 x 5 мм	Установка на 2,5" жесткого диска 2,5"
F. Винт KB5 x 10 мм	Установка вентилятора
G. Стойка 6-32 x 6,5 + 4 мм	Установка материнской платы
H. Позиционирующая стойка 6-32 x 6,5+4 мм	Установка материнской платы
I. Ключ для стоек	Установка материнской платы
J. Кабельный хомут	Организация кабельных систем
K. Кабель-разветвитель	Для подключения фронтальной панели к материнским платам с разъемами не-Intel стандарта
L. Разъем 3,5 мм для наушников	Преобразование одного 3,5-мм 4-полюсного аудиопорта в два 3,5-мм 3-полюсных аудиопорта

A. 나비너트 6-32 x 6mm	확장 슬롯 설치
B. 특수 나비너트 6-32 x 6mm	측면 패널, 팬 브라켓, 그래픽카드 세로 장착
C. 육각너트 6-32 x 6mm	전원공급장치 설치
D. 나사 6-32 x 5mm	마더보드 설치, 3.5 하드 드라이브 설치, PCI 장치 설치
E. 나사 M3 x 5mm	2.5 하드 드라이브 설치
F. 나사 KB5 x 10mm	팬 설치
G. 스페이서 6-32 x 6.5+4mm	마더보드 설치
H. 스탠드오프 6-32 x 6.5+4mm	마더보드 설치
I. 스탠드오프 렌치	마더보드 설치
J. 케이블 타이	케이블 정리
K. 브레이크아웃 케이블	비-인텔 표준 헤더보드 F 패널(전면 패널) 헤더 용
L. 3.5mm 헤드셋 오디오 잭 스플리터	단일 3.5mm 4 극 오디오 포트를 2 개의 3.5mm 3 극 오디오 포트로 변환

A. マイナス6.5-32 x 6.6mm	拡張スロット装着用
B. 特殊マイナス6.5-32 x 6mm	サイドパネル, ファンブラケット, 直立ディスプレイカードの取り付け
C. 六角ネジ6-32 x 6mm	電源装着用
D. ネジ6-32 x 5mm	マザーボード装着, 3.5HDD装着用, PCIデバイスの取り付け
E. ネジM3 x 5mm	2.5HDD装着
F. ネジKB5 x 10mm	ファン装着用
G. スタンドオフ6-32 x 6.5+4mm	Motherboard-Installation
H. 位置取り用スタッド6-32 x 6.5+4mm	マザーボード装着用
I. スタンドオフ - レンチ	マザーボード装着用
J. ケーブルタイ	ケーブル管理用
K. ブレークアウトケーブル	MBのFパネルがIntelの標準ではない場合
L. 3.5mmヘッドセットオーディオジャックスプリッタ	単一の3.5mm 4極オーディオポートを2つの3.5mm 3極オーディオポートに変換

A. 指螺栓 6-32 x 6mm	扩展槽安装
B. 特别指螺栓 6-32 x 6mm	侧面板, 风扇支架, 直立显示卡安装
C. 六角螺栓 6-32 x 6mm	安装电源
D. 螺丝 6-32 x 5mm	主板安装, 3.5 硬盘安装, PCI设备安装
E. 螺丝 M3 x 5mm	2.5 硬盘安装
F. 螺丝 KB5 x 10mm	安装风扇
G. 螺柱 6-32 x 6.5+4mm	主板安装
H. 螺柱定位 6-32 x 6.5+4mm	主板安装
I. 螺柱扳手	主板安装
J. 扎带	线缆管理
K. 分线缆	用于非英特尔标准主板前面板(F-Panel)
L. 3.5mm耳机音频孔分线器	将单个3.5mm 4极音频端口转换为两个3.5mm 3极音频端口

A. 螺丝螺栓 6-32 x 6mm	扩展插槽安装
B. 特别指螺栓 6-32 x 6mm	侧板, 风扇托架, 直立显示卡安装
C. 六角螺栓 6-32 x 6mm	安装电源
D. 螺栓 6-32 x 5mm	主板安装, 3.5 硬盘安装, PCI设备安装
E. 螺栓 M3 x 5mm	2.5 硬盘安装
F. 螺栓 KB5 x 10mm	安装风扇
G. 螺柱 6-32 x 6.5+4mm	主板安装
H. 螺柱定位 6-32 x 6.5+4mm	主板安装
I. 螺柱扳手	主板安装
J. 束线带	线缆管理
K. 跨接线	用于非英特尔标准主板前面板(F-Panel)
L. 3.5mm 耳机音频孔分线器	将单个3.5mm 4极音频端口转换为两个3.5mm 3极音频端口

SMART DEVICE V2

DISPOSITIVO INTELIGENTE V2
APPAREIL INTELLIGENT V2
SMART DEVICE V2
DISPOSITIVO INTELLIGENTE V2
DISPOSITIVO INTELIGENTE V2
ИНТЕЛЛЕКТУАЛЬНОЕ УСТРОЙСТВО V2
スマート デバイス V2
スマートデバイスV2
智能 设备 V2
智慧型裝置 V2

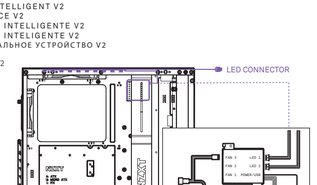

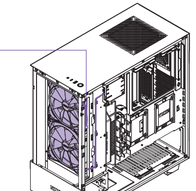

2x AER RGB 2 are integrated.
Connect additional AER RGB 2 fans via the end connector located at front top AER RGB 2 fans.

SMART DEVICE V2

The Smart Device connects to your PC via a single internal USB 2.0 connector. To enable control of the Smart Device, download and install NZXT CAM from camwebapp.com.
El dispositivo inteligente se conecta a tu PC mediante un único conector USB 2.0 interno. Para activar el control del dispositivo inteligente, descarga e instala NZXT CAM desde camwebapp.com.
Le Smart Device se connecte à votre PC via un seul port USB 2.0 interne. Pour activer le Smart Device, veuillez télécharger NZXT CAM sur camwebapp.com.
Das Smart Device wird über den internen USB 2.0-Anschluss mit ihrem PC verbunden. Um die Steuerung des Smart Device zu aktivieren, einfach NZXT CAM über camwebapp.com herunterladen und installieren.
Il dispositivo intelligente si collega al PC tramite un connettore USB 2.0 singolo interno. Per abilitare il controllo del dispositivo, scaricare e installare NZXT CAM da camwebapp.com.
O dispositivo inteligente se conecta a seu computador por um conector USB 2.0 interno simples. Para habilitar o controle do dispositivo inteligente, baixe e instale o NZXT CAM em camwebapp.com.
Интеллектуальное устройство подключается к ПК через внутренний порт USB 2.0. Для управления интеллектуальным устройством загрузите и установите NZXT CAM с сайта camwebapp.com.
このUSBを接続するだけで、スマートデバイスを制御するには、camwebapp.com から NZXT CAM をダウンロードしてインストールしてください。
智能设备通过单个 USB 2.0 接口连接到您的计算机。要想控制智能设备，请从 camwebapp.com 下载并安装 NZXT CAM。
智慧裝置透過一個內部的 USB 2.0 連接器連接至電腦。若要控制智慧裝置，請至 camwebapp.com 下載並安裝 NZXT CAM。

PORTS

FAN CONNECTORS - Three Fan connectors for three channels. To attach additional fans, use the included fan splitters.
Note: The first fan connector with 4 pins on the fan splitter will be the primary fan. Do not mix PWM or 3-pin fans.
Note: To most effectively use NZXT CAM's smart Adaptive Noise Reduction, you should connect your CPU fan to the Smart Device. If you choose to do this, you will need to disable the CPU Fan warning in your motherboard's BIOS settings.
RGB LED CONNECTOR - Two LED strips are pre-installed inside the case. Connect additional HUE 2 LED Strips via the end connector located on the top LED strip. To Connect Aer RGB 2, connect directly to the second RGB channel.
POWER CONNECTOR - Connect to the power supply to power on the smart device, fans, and LED strips.
Note: Do not connect while PC is powered on.

CONECTORES DE VENTILADOR - Tres conectores de ventilador para tres canales. Para conectar ventiladores adicionales, utiliza los cables bifurcadores para ventilador incluidos.
Nota: El primer conector de ventilador con 4 patillas del cable bifurcador para ventilador será el ventilador principal. No mezcle ventiladores PWM y de 3 patillas.
Nota: Para utilizar la reducción de ruido adaptativa inteligente de NZXT CAM de la forma más eficaz, debes conectar el ventilador de la CPU al dispositivo inteligente. Si decides hacerlo, deberás desactivar la advertencia del ventilador de la CPU en la configuración de la BIOS de la placa base.
CONECTOR LED RGB - Dos tiras LED vienen preinstaladas dentro de la caja. Conecta tiras LED HUE 2 adicionales a través del conector final situado en la tira LED superior. Para conectar Aer RGB 2, puedes hacerlo directamente al segundo canal RGB.
CONECTOR DE ALIMENTACIÓN - Conéctalo a la fuente de alimentación para alimentar el dispositivo inteligente, los ventiladores y las tiras de LED.
Nota: No lo conectes mientras el PC esté encendido.

CONNECTEURS DE VENTILATEUR - Trois connecteurs de ventilateur pour trois canaux. Pour installer d'autres ventilateurs, utilisez les répartiteurs fournis.
Remarque : le ventilateur branché au premier connecteur de ventilateur à 4 broches du répartiteur de ventilateur est le ventilateur principal. Ne pas brancher les ventilateurs PWM et les modèles à 3 broches sur le même canal.
Remarque : Pour profiter au maximum du système de réduction intelligente de bruit du NZXT CAM, vous devez relier le ventilateur de votre processeur au Smart Device. Dans ce cas, vous devrez désactiver l'avertissement d'absence de ventilateur du processeur dans les paramètres BIOS de votre carte mère.
CONNECTEUR LED RGB - Deux bandes LED sont préinstallées dans le boîtier. Connectez des bandes LED HUE 2 additionnelles au connecteur au bout de la bande LED supérieure. Pour connecter des Aer RGB 2, connectez-les directement sur le second canal RGB.
CONNECTEUR D'ALIMENTATION - Branchez à l'alimentation pour alimenter le Smart Device, les ventilateurs et les bandes LED.
Remarque : ne pas brancher lorsque l'ordinateur est sous tension.

LÜFTERANSCHLÜSSE - Drei Lüfteranschlüsse für drei Kanäle. Weitere Lüfter können über die im Lieferumfang enthaltenen Lüfter-Splitter angeschlossen werden.
Hinweis: Der erste 4-polige Lüfteranschluss am Lüfter-Splitter ist der primäre Lüfter- PWM und 3-polige Lüfter dürfen nicht über denselben Kanal kombiniert werden.
Hinweis: Für den effizienten Einsatz der intelligenten Adaptive Noise Reduction am NZXT CAM sollten Sie den CPU-Lüfter mit dem Smart Device verbinden. Sie müssen dazu die CPU-Lüfterwarnung in den BIOS-Einstellungen des Mainboards deaktivieren.
RGB-LED-STECKVERBINDER - Im Inneren des Gehäuses sind zwei LED-Streifen vorinstalliert. Verbinden Sie zusätzliche HUE 2 LED-Streifen über den Verbindungsstecker, der sich auf dem oberen LED-Streifen befindet. Um Aer RGB 2 Lüfter zu verbinden, verwenden Sie bitte direkt den zweiten RGB-Kanal.
STROMANSCHLUSS - Schließen Sie das Netzteil an, um das Smart Device, die Lüfter und die LED-Streifen einzuschalten.
Hinweis: Nicht anschließen, während der PC eingeschaltet ist.

CONNETTORI VENTOLE - Tre connettori ventole per tre canali. Per fissare le ventole aggiuntive, utilizzare gli splitter ventole inclusi.
Nota: Il primo connettore ventole con 4-pin sullo splitter ventole sarà la ventola principale. Non mischiare ventole PWM e ventole a 3 pin nello stesso canale.
Nota: per utilizzare in maniera più efficace la riduzione del rumore adattiva di NZXT CAM, si consiglia di connettere la ventola CPU al dispositivo intelligente. Se si sceglie questa opzione, è necessario disattivare l'avviso relativo alla ventola CPU nelle impostazioni BIOS della scheda madre.
CONNETTORE LED RGB - Im Inneren des Gehäuses sind zwei LED-Streifen vorinstalliert. Verbinden Sie zusätzliche HUE 2 LED-Streifen über den Verbindungsstecker, der sich auf dem oberen LED-Streifen befindet. Um Aer RGB 2 Lüfter zu verbinden, verwenden Sie bitte direkt den zweiten RGB-Kanal.
CONNETTORE DI ALIMENTAZIONE - Collegare l'alimentazione per accendere il dispositivo intelligente, le ventole e i nastri LED.
Nota: non effettuare il collegamento se il PC è acceso.

CONECTORES DE VENTOINHA - Três conectores de ventoinhas para três canais. Para conectar ventoinhas adicionais, utilize os divisores para ventoinha incluídos.
Nota: O primeiro conector de ventoinha com 4 pinos no divisor para ventoinha será a ventoinha primária. Não misture ventoinhas PWM ou 3 pinos.
Nota: Para usar a redução adaptável de ruído inteligente da NZXT CAM, você deve conectar a ventoinha da CPU ao dispositivo inteligente.
Se você escolher fazer isso, será necessário desabilitar o alerta da ventoinha da CPU nas configurações BIOS da placa-mãe.
CONECTOR RGB DE LED - Duas fitas LED vêm pré-instaladas dentro do gabinete. Conecte outras fitas LED HUE 2 através do conector localizado no final da fita LED do topo. Para conectar o Aer RGB 2, conecte-o diretamente ao segundo canal RGB.
CONECTOR DE ALIMENTAÇÃO - Conecte a fonte de alimentação à alimentação do dispositivo inteligente, às ventoinhas e às faixas de LED.
Nota: Não conecte enquanto o computador estiver ligado.

CLEARANCES AND SPECIFICATIONS

MEDIDAS Y ESPECIFICACIONES
DÉGAGEMENTS ET SPÉCIFICATIONS
ABSTÄNDE UND TECHNISCHE DATEN
SPAZI NECESSARI E SPECIFICHE
DIMENSÕES E ESPECIFICAÇÕES
ТЕХНИЧЕСКИЕ ХАРАКТЕРИСТИКИ И ЗАЗОРЫ
간격과 규격
空間と仕様
间距与规格
間距與規格

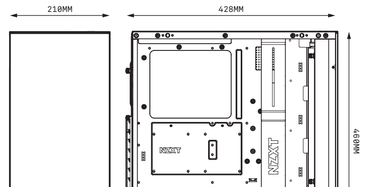
210MM
428MM
NZXT
NZXT
NZXT

SMART DEVICE V2

DISPOSITIVO INTELIGENTE V2
APPAREIL INTELLIGENT V2
SMART DEVICE V2
DISPOSITIVO INTELLIGENTE V2
DISPOSITIVO INTELIGENTE V2
ИНТЕЛЛЕКТУАЛЬНОЕ УСТРОЙСТВО V2
스마트 장치 V2
スマートデバイスV2
智能设备 V2
智慧裝置 V2

Разъемы вентиляторов - Три разъема вентиляторов для трех каналов. Чтобы присоединить дополнительные вентиляторы, воспользуйтесь разветвительными кабелями для вентиляторов (в комплекте).
Примечание. Первый 4-контактный разъем разветвительного кабеля предназначен для основного вентилятора. Не используйте PWM и 3-контактные вентиляторы на одном канале.
Примечание. Для максимально эффективного использования интеллектуальной функции адаптивного шумоподавления NZXT CAM необходимо подключить вентилятор ЦП к интеллектуальному устройству. Если вы решите это сделать, необходимо будет отключить предупреждение вентилятора ЦП в настройках BIOS материнской платы.
Светодиодный разъем (RGB) - Внутри корпуса предварительно установлены две дополнительные светодиодные полосы. Подключите дополнительные светодиодные полосы HUE 2 через концевой разъем, расположенный на верхней светодиодной полоске. Для подключения Aer RGB 2 подключите непосредственно ко второму каналу RGB.
Разъем питания - Чтобы включить интеллектуальное устройство, вентиляторы и светодиодные ленты, подключите их к блоку питания. Примечание. Не подключайте, если ПК включен.

팬 커넥터 - 3개 채널을 탑재했으며, 각 채널별로 3개의 팬 커넥터가 있습니다. 다른 팬을 추가로 설치하려면 포함된 팬 스플리터를 사용하십시오.
참고: 팬 스플리터에 핀 4개가 있는 첫 번째 팬 커넥터가 기본 팬입니다. PWM과 3핀 팬을 혼용하지 마십시오.
참고: NZXT CAM의 스마트한 적응형 노이즈 감소 기능을 효율적으로 사용하려면 CPU 팬을 스마트 장치에 연결해야 합니다. CPU 팬을 스마트 장치에 연결할 경우, 마더보드의 BIOS 설정에서 CPU 팬 경고 기능을 비활성화해야 할 수도 있습니다.
RGB LED 커넥터 - L두 개의 LED 스트립이 케이스 내부에 기본 설치되어 있습니다. 상단 LED 스트립의 끝단에 위치한 커넥터를 이용해 HUE 2 LED 스트립을 추가로 연결하십시오. Aer RGB 2 제품을 연결하려면 두 번째 RGB 채널에 직접 연결하십시오.
전원 커넥터 - 전원 공급 장치에 연결하여 스마트 장치, 팬, LED 스트립에 전원을 공급합니다.
참고: PC 전원이 켜져 있는 동안에는 연결하지 마십시오.

ファンコネクタ - 3つのチャネル用に3つのファンコネクタがあります。追加のファンを取り付けるには、付属のファンスプリッタを使用してください。
注:ファンスプリッタの最初の4ピンファンコネクタがプライマリファンになります。同じチャネルにPWMファンと3ピンファンを混在させないでください。
注:NZXT CAMのスマート自動ノイズ低減機能を最も効果的に使用するには、CPUファンをスマートデバイスに接続する必要があります。接続する場合は、マザーボードのBIOS設定でCPUファンの警告を無効にする必要があります。
RGB LED コネクタ - 2つのLEDストリップがハウジングにあらかじめ取り付けられています。追加のHUE 2 LEDストリップは、上部LEDストリップの端にあるコネクタを介して接続されます。Aer RGB 2 ファンを接続するには、2番目のRGBチャンネルに直接接続します。
電源コネクタ - スマートデバイス、ファン、LED ストリップに電源を供給するには、電源に接続してください。
注:PC の電源がオンの間は接続しないでください。

风扇接头 - 三个风扇接头，用于三个通道。要连接额外的风扇，请使用随附的风扇转接线。
注：风扇分频线上第一个 4 针风扇接头将用于主风扇。在同一通道请勿混淆 PWM 或 3 针风扇。
注：为了更有效地使用 NZXT CAM 的智能自适应降噪功能，您应该将 CPU 风扇连接到智能设备上。如果选择这样做，您应该在主板的 BIOS 设置中禁用 CPU 风扇警告。
RGB LED 接头 - 两个LED灯带预装在机箱内。通过位于顶部LED灯带的末端连接器连接额外的HUE 2 LED灯带。要连接Aer RGB 2，请直接连接到第二个RGB通道。
电源接头 - 连接到电源，让智能设备、风扇和 LED 灯带通电。
注：请勿在计算机通电状态下进行连接。

風扇連接器 - 三個風扇連接器供三個通道使用。若要連接額外的風扇，請使用隨附的風扇分線器。
備註：風扇分線器上的第一個 4 針腳風扇連接器將是主要風扇。請勿在同一個通道中混用 PWM 或 3 針腳風扇。
備註：若要以最有效的方式使用 NZXT CAM 的自主適應降噪功能，您應將 CPU 風扇連接到智慧型裝置。若選擇這樣做，您必須停用主機板 BIOS 設定中的 CPU 風扇警告。
RGB LED 接頭 - 兩個LED燈條已預先安裝於機殼內。通過頂部LED燈條末端的連接頭連接額外的HUE 2 LED燈條。 若要連接Aer RGB 2風扇，請直接連接到第二個RGB通道。
電源連接器 - 連接至電源供應器，為智慧裝置、風扇及 LED 燈條供電和啟用。
備註：電腦電源開啟時，請勿連接。

CABLE CONNECTIONS

DISCO DE ADMINISTRACIÓN DE CABLES
CONNEXIONS DES CÂBLES
KABELVERBINDUNGEN
COLLEGAMENTI DEI CAVI
LIGAÇÕES DE CABOS
ПОДКЛЮЧЕНИЕ КАБЕЛЕЙ
케이블 연결
ケーブル接続
线缆连接
線路連接

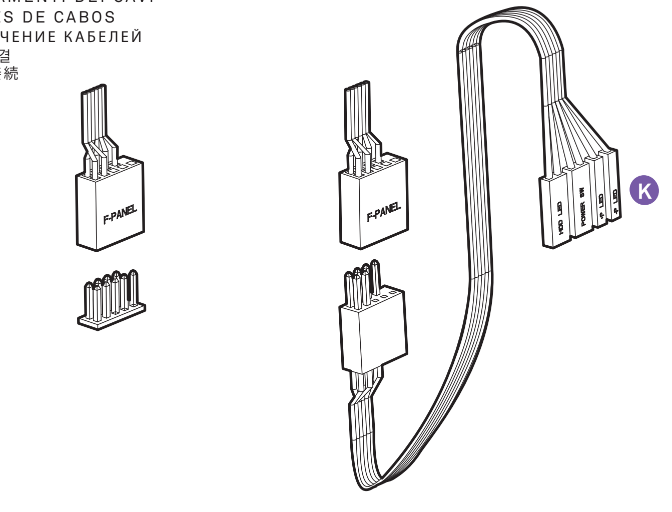

FOR INTEL STANDARD F_PANEL HEADER USE

FOR NON-INTEL STANDARD F_PANEL HEADER USE

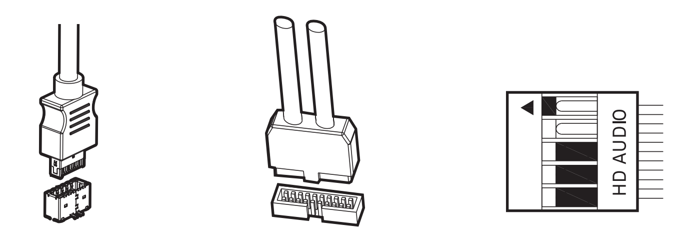

USB3.1 GEN 2

USB 3.1 GEN 1

HD AUDIO

BUTTONS AND I/O

BOTONES Y E/S
BOUTONS ET E/S
TASTEN UND E/A
PULSANTI E I/O
BOTÕES E E/S
КНОПКИ И РАЗЪЕМЫ ВВОДА/ВЫВОДА
버튼 및 I/O
ボタンおよび I/O
按钮和 I/O
按鈕和 I/O

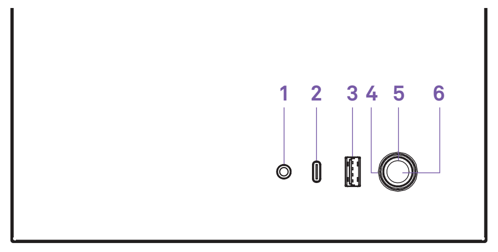

1. HD Audio Output
2. USB 3.1 Gen2 Type-C
3. USB 3.1 Gen1 Type-A
4. HDD LED
5. Power LED
6. Power switch

1. Salida de audio HD
2. USB 3.1 Gen2 Type-C
3. USB 3.1 Gen1 Type-A
4. LED de unidad de disco duro
5. LED de alimentación
6. Interruptor de encendido

1. Sortie audio HD
2. USB 3.1 Gen2 Type-C
3. USB 3.1 Gen1 Type-A
4. Témoin disque dur
5. Témoin d'alimentation
6. Interrupteur marche/arrêt

1. HD-Audioausgang
2. USB 3.1 Gen2 Type-C
3. USB 3.1 Gen1 Type-A
4. Festplatten-LED
5. Betriebs-LED
6. Netzschalter

1. Uscita audio HD
2. USB 3.1 Gen2 Type-C
3. USB 3.1 Gen1 Type-A
4. LED HDD
5. LED alimentazione
6. Interruttore d'alimentazione

1. Saída de áudio HD
2. USB 3.1 Gen2 Type-C
3. USB 3.1 Gen1 Type-A
4. LED do HDD
5. LED de alimentação
6. Interruptor de alimentação

1. Звуковой выход HD
2. USB 3.1 Gen2 Type-C
3. USB 3.1 Gen1 Type-A
4. Индикатор жесткого диска
5. Индикатор питания
6. Выключатель питания

1. HD 오디오 출력
2. USB 3.1 Gen2 Type-C
3. USB 3.1 Gen1 Type-A
4. HDD LED
5. 전원 LED
6. 전원 스위치

1. HDオーディオ
2. USB 3.1 Gen2 Type-C
3. USB 3.1 Gen1 Type-A
4. HDD LED
5. パワーLED
6. 電源スイッチ

1. 高清音频输出
2. USB 3.1 Gen2 Type-C
3. USB 3.1 Gen1 Type-A
4. HDD LED
5. 电源LED
6. 电源开关

1. 高清音頻輸出
2. USB 3.1 Gen2 Type-C
3. USB 3.1 Gen1 Type-A
4. HDD LED
5. 電源LED
6. 電源開關

PANEL REMOVAL

EXTRACCIÓN DE PANEL
RETRAIT DU PANNEAU
BLENDE ENTFERNEN
RIMOZIONE DEL PANNELLO
REMOÇÃO DOS PAINÉIS
СНЯТИЕ ПАНЕЛИ
패널 제거
パネルの取り外し
卸下面板
移除面板

1 LOCATE AND REMOVE SCREWS

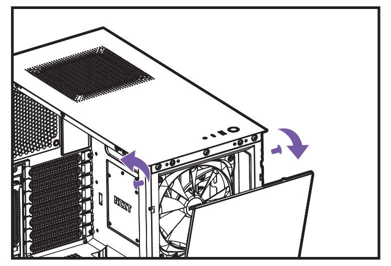

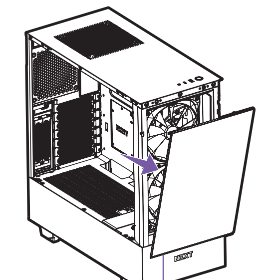

2 REMOVE PANEL

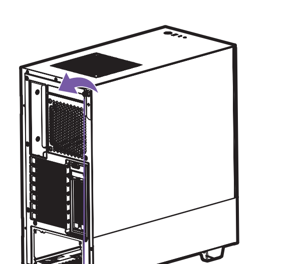

3 UNSCREW CAPTIVE THUMB SCREW

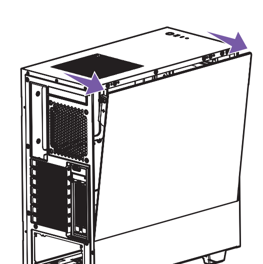

4 PULL TOP OF GLASS PANEL

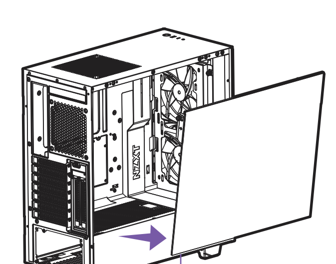

5 LIFT AND REMOVE PANEL

CABLE MANAGEMENT SYSTEM

SISTEMA DE GESTIÓN DE CABLES
SYSTÈME DE CÂBLAGE
KABELMANAGEMENTSYSTEM
SISTEMA DI GESTIONE DEI CAVI
SISTEMA DE GERENCIAMENTO DE CABOS
СИСТЕМА ПРОКЛАДКИ КАБЕЛЕЙ
케이블 관리 시스템
ケーブルマネジメントシステム
理线管理系统
整線管理系統

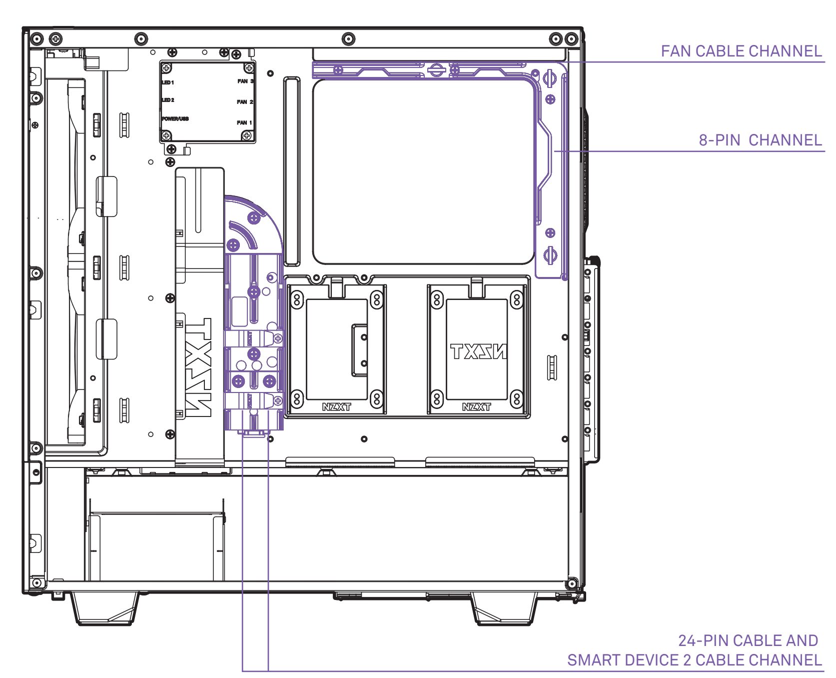

MOTHERBOARD INSTALLATION

INSTALACIÓN DE LA PLACA BASE
INSTALLATION DE LA CARTE MÈRE
INSTALLATION DER HAUPTPLATINE
INSTALLAZIONE DELLA SCHEDA MADRE
INSTALAÇÃO DA PLACA PRINCIPAL
УСТАНОВКА СИСТЕМНОЙ ПЛАТЫ
마더보드 설치
マザーボードの装着
主板安装
主機板安裝

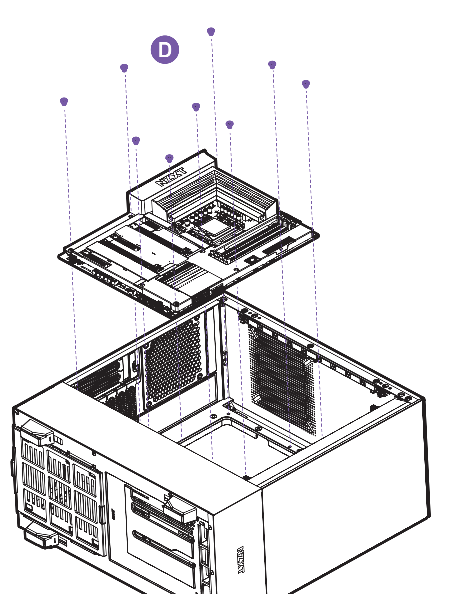

POWER SUPPLY INSTALLATION

INSTALACIÓN DE LA FUENTE DE ALIMENTACIÓN
INSTALLATION DE L'ALIMENTATION
INSTALLATION DER STROMVERSORGUNG
INSTALLAZIONE DELL'ALIMENTATORE
INSTALAÇÃO DA FONTE DE ALIMENTAÇÃO
УСТАНОВКА ИСТОЧНИКА ПИТАНИЯ
전원공급장치 설치
電源の装着
电源安装
電源安裝

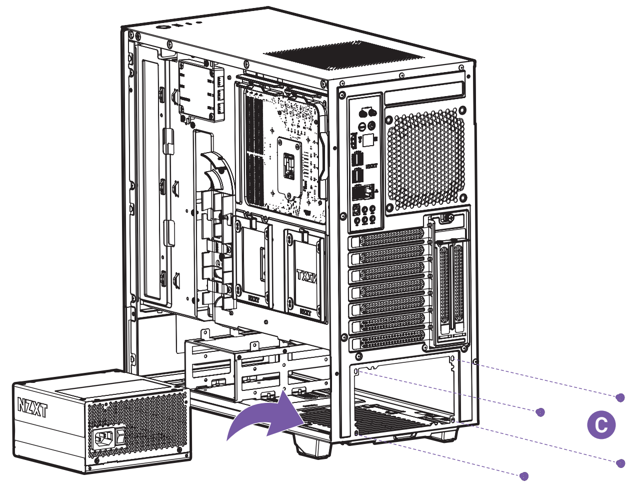

IMPORTANT!
Install the PSU with the fan facing down.

EXPANSION CARD INSTALLATION

INSTALACIÓN DE LA TARJETA DE EXPANSIÓN
INSTALLATION DE LA CARTE D'EXTENSION
INSTALLATION DER ERWEITERUNGSKARTE
INSTALLAZIONE DELLA SCHEDA D'ESPANSIONE
INSTALAÇÃO DA PLACA DE EXPANSÃO
УСТАНОВКА ПЛАТЫ РАСШИРЕНИЯ
확장 카드 설치
拡張カードの装着
扩展卡安装
擴充卡安裝

UNSCREW THE THUMB SCREW

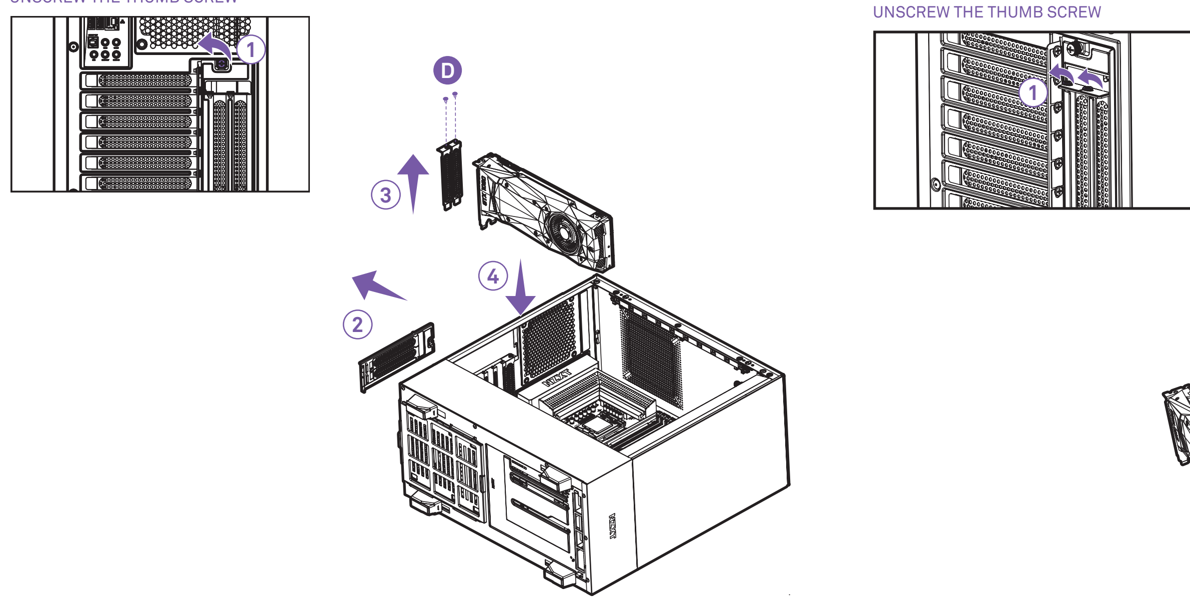

HORIZONTAL GPU MOUNT

UNSCREW THE THUMB SCREW

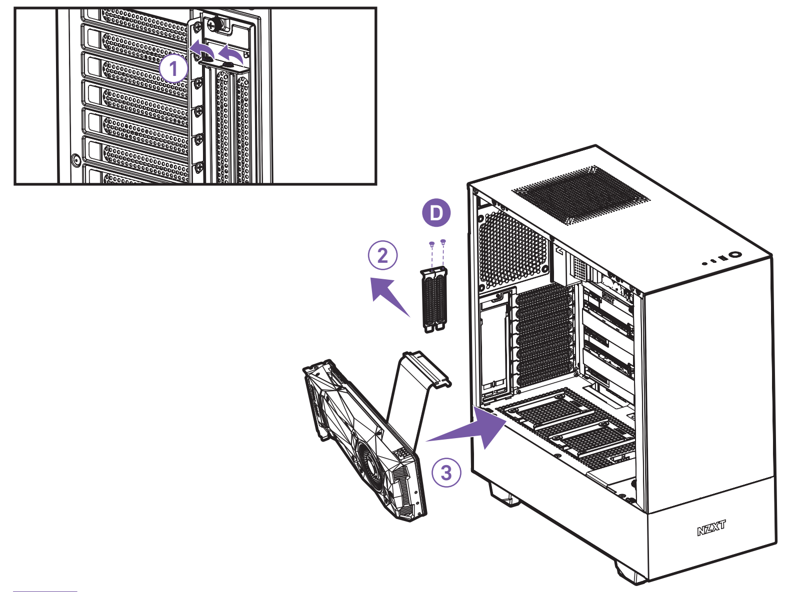

VERTICAL GPU MOUNT

HDD DRIVE INSTALLATION

INSTALACIÓN DE LA UNIDAD DE DISCO DURO
INSTALLATION DE LECTEUR HDD
HDD-LAUFWERKSINSTALLATION
INSTALLAZIONE DELL'UNITÀ HDD
INSTALAÇÃO DA PLACA DE EXPANSÃO
УСТАНОВКА ЖЕСТКОГО ДИСКА
HDD 드라이브 설치
HDD装着
HDD 驱动器安装
硬碟安裝

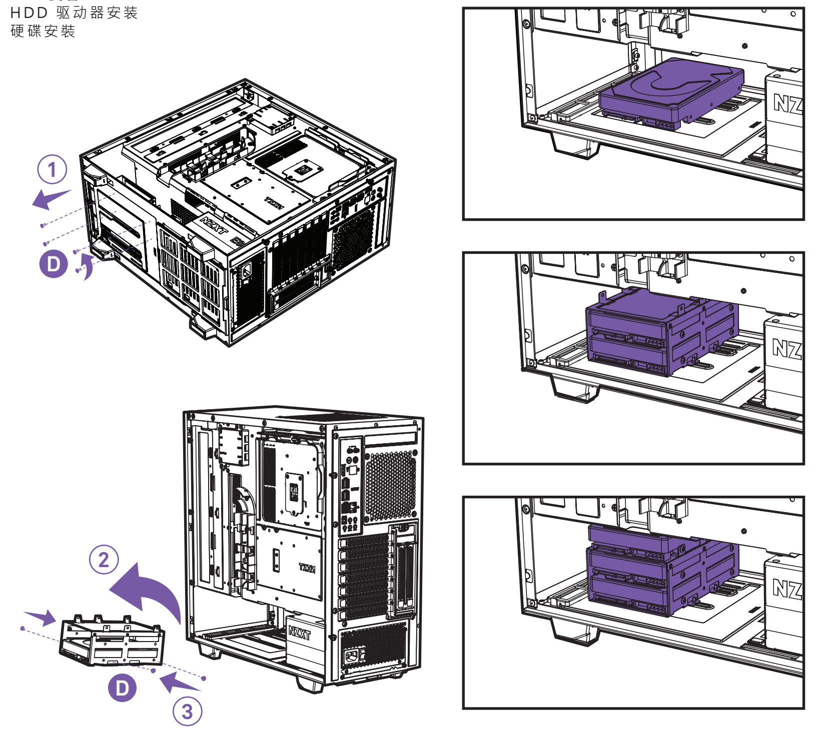

SSD DRIVE INSTALLATION

INSTALACIÓN DE LA UNIDAD DE DISCO DE ESTADO SÓLIDO
INSTALLATION DU DISQUE SSD
SSD-LAUFWERKSINSTALLATION
INSTALLAZIONE DELL'UNITÀ SDD
INSTALAÇÃO DA PLACA DE EXPANSÃO
УСТАНОВКА ТВЕРДОТЕЛЬНОГО НАКОПИТЕЛЯ
SSD드라이브설치
SSD装着
SSD驱动器安装
SSD安裝

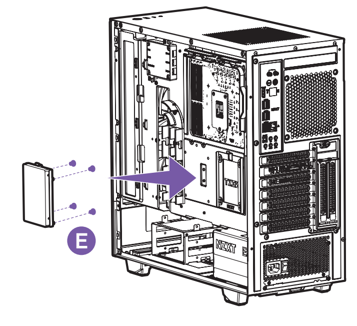

VERTICAL MOUNT

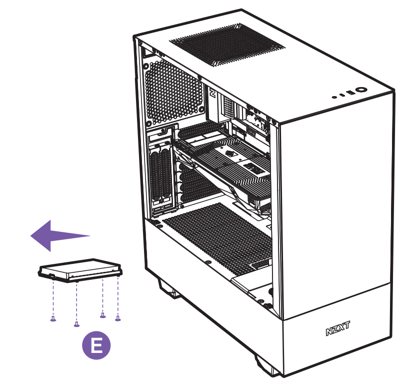

HORIZONTAL MOUNT

DIY LIQUID COOLER SUPPORT

HAZLO TÚ MISMO: SOPORTE PARA REFRIGERADOR LÍQUIDO
SUPPORT DE REFROIDISSEMENT LIQUIDE À ASSEMBLER VOUS-MÊME
WASSERKÜHLUNG MARKE EIGENBAU
SUPPORTO PER DISSIPATORE A LIQUIDO FAI-DA-TE
SUPORTE A REFRIGERAÇÃO LÍQUIDA DIY
ПОДДЕРЖКА САМОСТОЯТЕЛЬНОЙ СБОРКИ ЖИДКОСТНОЙ СИСТЕМЫ ОХЛАЖДЕНИЯ
DIY 수냉식 쿨러 지원
水冷クーラー支持部の DIY
DIY 液体冷却器支持
DIY 水冷支援

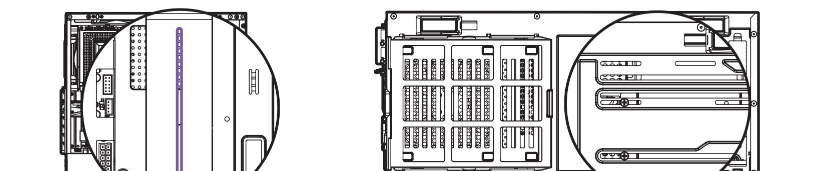

The Cable Bar could support up to 150mm tall tube reservoir with M4 screws
The bottom Panel could support D5 or DDC pump mount with M4 screws

La barra para cables podría soportar un depósito de tubo de hasta 150 mm de alto con tornillos M4
El panel inferior podría soportar el montaje de una bomba D5 o DDC con tornillos M4

La barre de gestion des câbles peut supporter un réservoir d'une hauteur maximale de 150 mm avec des vis M4
Le panneau inférieur peut supporter un montage de pompe D5 ou DDC avec des vis M4

Die Kabelschiene bietet Platz für einen bis zu 150 mm hohen Rohrbehälter mit M4-Schrauben
Die untere Abdeckung bietet Platz für eine D5- oder DDC-Pumpenhalterung mit M4-Schrauben

La barra dei cavi supporta un serbatoio tubolare alto fino a 150 mm con viti M4
Il pannello inferiore supporta il montaggio della pompa D5 o DDC con viti M4

A barra de limpeza pode suportar um reservatório de tubos alto de 150 mm com parafusos M4
O painel inferior pode suportar montagem de bomba D5 ou DDC com parafusos M4

На кабельную панель можно устанавливать трубчатый резервуар высотой до 150 мм с помощью винтов M4
На нижнюю панель можно устанавливать насос D5 или DDC с помощью винтов M4

케이블 바는 M4 나사로 최대 150mm 높이의 튜브 물통을 지지할 수 있습니다
하단 패널은 M4 나사로 D5 또는 DDC 펌프 마운트를 지지할 수 있습니다

ケーブルバーで、M4 ネジで高さが最大 150mm のチューブ式水タンクを支える必要があります
ボトムパネルには、M4 ネジで D5 または DDC ポンプを取り付ける必要があります

线缆条可以用 M4 螺丝支撑高达 150 毫米的高管容器
底部面板可以用 M4 螺丝支持 D5 或 DDC 泵安装

纜線桿使用 M4 螺絲，可以支撐最高 150mm 的蓄水管
底部面板使用 M4 螺絲，可以支撐 D5 或 DDC 泵安裝座

FAN AND RADIATOR SUPPORT

COMPATIBILIDAD DE VENTILADORES Y RADIADORES
PRISE EN CHARGE DES RADIATEURS ET VENTILATEURS
LÜFTER- UND KÜHLER-UNTERSTÜTZUNG
SUPPORTO VENTOLE E RADIATORE
SUPORTE PARA VENTOINHA E A RADIADOR
СОВМЕСТИМЫЕ РАДИАТОР И ВЕНТИЛЯТОР
팬 및 라디에이터 지원
対応ファンおよびラジエータ
风扇和散热器支持
風扇和散熱排支援

RADIATOR MODE

FAN MODE

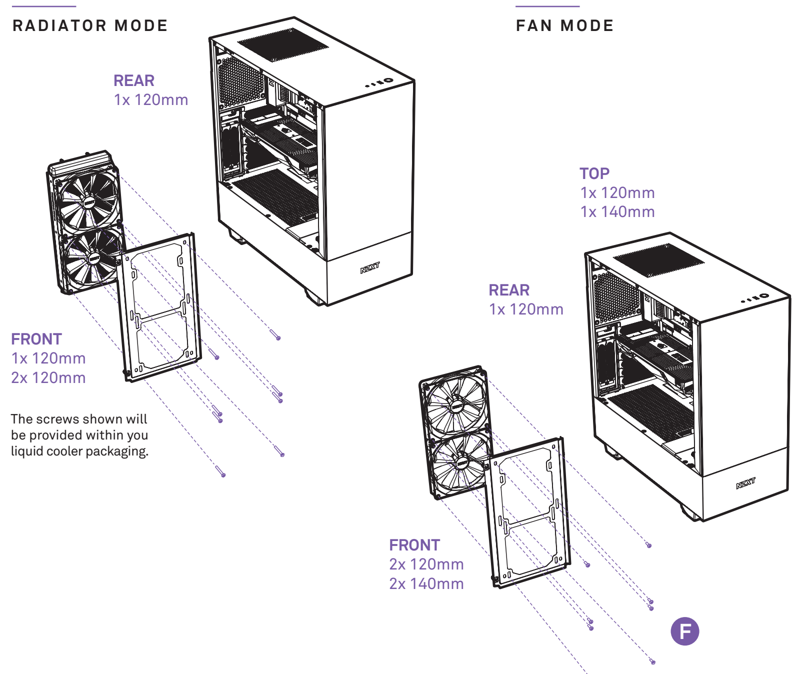

The screws shown will be provided within you liquid cooler packaging.

HAZARDOUS SUBSTANCES

有毒有害物质及元素

设备名称：机箱 · H系列

	有害物质					
部件名称	铅 (Pb)	汞(Hg)	镉 (Cd)	六价铬 (Cr^{+6})	多溴联苯 (PBB)	多溴联苯醚 (PBDE)
PCBA及板上元件	○	○	○	○	○	○
连接器	○	○	○	○	○	○
线材	○	○	○	○	○	○
金属结构件	○	○	○	○	○	○
塑胶结构件	○	○	○	○	○	○
风扇	○	○	○	○	○	○
涂料	○	○	○	○	○	○
包装及缓冲材料	○	○	○	○	○	○
纸类及印刷品	○	○	○	○	○	○

本表格依据SJ/T 11364的规定编制。
○：表示该有害物质在该部件所有均质材料中的含量均在GB/T 26572规定的限量要求下。
X：表示该有害物质至少在该部件的某一均值材料中的含量超出GB/T 26572官定的限量要求。

設備名稱：機箱：H系列

	限用物質及其化學符號					
單元	鉛 (Pb)	汞(Hg)	鎘 (Cd)	六價鉻 (Cr^{+6})	多溴聯苯 (PBB)	多溴二苯醚 (PBDE)
PCBA及板上元件	○	○	○	○	○	○
連接器	○	○	○	○	○	○
線材	○	○	○	○	○	○
金屬結構件	○	○	○	○	○	○
塑膠結構件	○	○	○	○	○	○
風扇	○	○	○	○	○	○
塗料	○	○	○	○	○	○
包裝及緩衝材料	○	○	○	○	○	○
紙類及印刷品	○	○	○	○	○	○

備考1. "超出0.1 wt%"及 "超出0.01 wt%"係指限用物質之百分比含量超出百分比含量基準值。
備考2. "O"係指該項限用物質之百分比含量未超出百分比含量基準值。
備考3. "-" 係指該項限用物質為排除項目。

REGULATIONS

This personal computer case with the smart device is tested to comply with FCC standard, Australian standard and EU EMC Directive (2014/30/EU)
CAN ICES-3(B) / NMB-3(B)
This Class B personal computer case with smart device complies with Canadian ICES-003
Cet étui pour ordinateur personnel de classe B avec dispositif intelligent est conforme à la norme NMB-003 du Canada

NZXT GLOBAL WARRANTY POLICY

This NZXT Global Warranty Policy governs the sale of products by NZXT to you.

I. WARRANTY LENGTH

New NZXT Product	Warranty Length for Parts
Computer Cases	2 Years
Temperature Meters	2 Years
Fans	2 Years
Lighting	2 Years
Accessories	2 Years
Headset/Headphone	2 Years
Headset/Headphone Storage	2 Years
Mixer	2 Years
Speakers	2 Years
KRAKEN M Coolers	3 Years
Motherboards	4 Years
HALE90 Power Supply	5 Years
KRAKEN Coolers	6 Years

Refurbished NZXT Product	Warranty Length for Parts
All NZXT Certified Refurbished Products	1Years

Any replacement product will be covered under warranty for the remainder of the warranty period or thirty days, whichever is longer. Proof of purchase is required for warranty service.

II. WHO IS PROTECTED
The Warranty covers only NZXT products purchased by the original consumer.

III. WHAT IS AND IS NOT COVERED
Please note that our warranty is not an unconditional guarantee. If the product, in NZXT's reasonable opinion, malfunctions within the warranty period, NZXT will provide you at its sole discretion with a repaired or replacement product, either new or refurbished, with a similar function that is equal or greater in value depending on supply. Our warranty does not cover the following:

- any product or serial number/warranty sticker modification applied without permission from NZXT;
- any damage that is not a manufacturing defect;
- damage, deterioration or malfunction resulting from: accident, abuse, misuse, neglect, fire, water, lightning, or other acts of nature, unauthorized product modification or failure to follow instructions included with the product;
- improper installation, unauthorised alterations or modifications, or repair or attempted repair by anyone not authorized by NZXT;
- shipping or transport damage (claims must be made with the carrier); and
- normal wear and tear.

NZXT does not warrant that this product will meet your requirements. It is your responsibility to determine the suitability of this product for your purpose. For NZXT Store orders, we cover two way return shipping for all exchanges and returns. For all other authorized dealers, NZXT Support does not cover return shipping and only covers one way shipping from NZXT back to the end user for exchanges. Two way expedited shipping is provided for all PSUs covered under the Less Than Three program, indiscriminate of purchase location, provided the location is an approved NZXT reseller.

IV. EXCLUSION OF DAMAGES (DISCLAIMER)
NZXT's sole obligation and liability under this warranty is limited to the repair or replacement of a defective product with either a new or refurbished product with a similar function that is equal or greater in value at our option. NZXT shall not, in any event, be liable for any incidental or consequential damage, including but not limited to damages resulting from interruption of service and loss of data, business, or for liability in tort relating to this product or resulting from its use or possession.

V. LIMITATIONS OF IMPLIED WARRANTIES
There are no other warranties, expressed or implied, including but not limited to those of merchantability or fitness for a particular purpose. The duration of implied warranties is limited to the warranty length specified in Paragraph I.

VI. TO OBTAIN TECHNICAL SUPPORT
If you have already referenced your product owner's manual and still need help, you may contact us by phone at +1 (800) 228-9395, by email at service@nzxt.com, or visit the NZXT Support site at https://www.nzxt.com/customer-support.

VIII. APPLICABLE LAW AND ADDITIONAL LEGAL RIGHTS FOR CONSUMERS
This warranty gives you specific legal rights. These conditions are governed and construed in accordance with the laws of California (with exception of its conflict of law provisions), and the application of the United Nations Convention of Contracts for the International Sale of Goods is expressly excluded. The non-exclusive jurisdiction of the courts of California is agreed, which means that you may bring a claim to enforce your consumer protection rights in connection with this Global Warranty in the country which you have your habitual residence where you may have additional rights. These rights may vary.

For original consumers who are covered by consumer protection laws or regulations in their country, state, or province of purchase or, if different, their country, state, or province of residence, the benefits conferred by this warranty are in addition to all rights and remedies conveyed by such consumer protection laws and regulations. To the extent that liability under such consumer laws can be limited, NZXT's liability is limited, and its sole option, to repair or replacement, either new or refurbished, with a similar function that is equal or greater in value depending on supply.

VIII. APPLICABLE LAW AND ADDITIONAL LEGAL RIGHTS FOR CONSUMERS
This warranty gives you specific legal rights. These conditions are governed and construed in accordance with the laws of California (with exception of its conflict of law provisions), and the application of the United Nations Convention of Contracts for the International Sale of Goods is expressly excluded. The non-exclusive jurisdiction of the courts of California is agreed, which means that you may bring a claim to enforce your consumer protection rights in connection with this Global Warranty in the country which you have your habitual residence where you may have additional rights. These rights may vary.

For original consumers who are covered by consumer protection laws or regulations in their country, state, or province of purchase or, if different, their country, state, or province of residence, the benefits conferred by this warranty are in addition to all rights and remedies conveyed by such consumer protection laws and regulations. To the extent that liability under such consumer laws can be limited, NZXT's liability is limited, and its sole option, to repair or replacement, either new or refurbished, with a similar function that is equal or greater in value depending on supply.

In the United Kingdom:

- For NZXT products sold to customers in the UK, during the expected lifespan of your product your legal rights entitle you to the following:
  - Up to 30 days: if your goods are faulty, then you can get an immediate refund.
  - Up to six months: if your goods can't be repaired or replaced, then you're entitled to a full refund, in most cases.
  - Up to six years: if your goods do not last a reasonable length of time you may be entitled to some money back.
- If the person seeking to rely on the guarantee is not the original consumer, the NZXT Warranty will cover the product in relation to that person provided that they are able to provide proof of the transfer of the benefit of the guarantee from the original consumer.
- The implied warranties under the Consumer Rights Act 2015 says that your goods must be as described, fit for all purposes for which such goods are usually supplied, and of satisfactory quality.

In the EU:

- If you are a consumer and have your habitual residence in the EU, you additionally enjoy the protection afforded to you by provisions that cannot be derogated from by agreement by virtue of the law where you have your habitual residence.

IX. WARRANTY SERVICE FROM RESELLERS
In the event that a warranty service is sought, you must provide proof of purchase (store receipt or invoice) in order to receive the service and if deemed necessary, repair or replacement product.

In North America:
Within the first 60 days after purchase, please return your product (or for power supplies installed within our enclosures, just the failed power supply) to your dealer or reseller for a replacement. If the product is still within warranty and you can no longer return it to your dealer, please contact NZXT Customer Support (see above) for assistance and instructions. NZXT will not accept returns without prior approval and an RMA number.

In Europe:
Within the first year after purchase, please return your product (or for power supplies installed within our enclosures, just the failed power supply) to your dealer or reseller for a replacement. If the product is still within warranty and you can no longer return it to your dealer, please contact NZXT Customer Support (see above) for assistance and instructions. NZXT will not accept returns without prior approval.

In Australasia:
Within the first two years after purchase, please return your product (or for power supplies installed within our enclosures, just the failed power supply) to your dealer or reseller for a replacement. If the product is still within warranty and you can no longer return it to your dealer, please contact NZXT Customer Support (see above) for assistance and instructions. NZXT will not accept returns without prior approval.
The cost of shipping will be borne at the first instance by you; however, if the purchased item is defective, NZXT will reimburse reasonable postage or transportation of costs.

Outside North America, Europe, and Australasia:
If your product needs to be returned within the warranty period, please contact the retailer or distributor from whom you purchased the product.

X. NZXT.COM STORE RETURNS/EXCHANGE POLICY
Eligible products under this NZXT Warranty qualify for a full refund or exchange only with an authorized RMA number and if the item is returned to the NZXT.com store inventory within 30 days of purchase. Returns are not allowed beyond 30 days of the purchase date. The NZXT.com Store reserves the right to deny any return or exchange. Refunds will be credited to the original method of payment. To initiate a return, simply submit a request via NZXT support site.

- Visit nzxt.com/warranty and support.nzxt.com for information on warranty coverage and service
- Visite el sitio Web nzxt.com/warranty y support.nzxt.com para obtener información sobre la cobertura y el servicio de la garantía
- Visitez nzxt.com/warranty et support.nzxt.com pour les informations de la couverture de la garantie et du service
- Informationen zu Geltungsbereich und Service der Garantie finden Sie unter support.nzxt.com und nzxt.com/warranty
- Visitare il sito nzxt.com/warranty e support.nzxt.com per informazioni sulla copertura e sul servizio della garanzia
- Visite nzxt.com/warranty e support.nzxt.com para obter informações sobre a cobertura da garantia e assistência
- Подробную информацию об условиях гарантийного обслуживания см. на веб-сайте nzxt.com/warranty и support.nzxt.com
- 제품 보증 범위와 서비스 정보를 확인하시려면 http://nzxt.com/warranty 또는 http://support.nzxt.com 을 방문해 주시기 바랍니다
- 保証範囲およびサービスに関する情報については、support.nzxt.comと nzxt.com/warrantyにアクセスしてください
- 请造访 nzxt.com/warranty 和 support.nzxt.com 了解保修范围和服务的信息
- 請訪問 nzxt.com/warranty 和 support.nzxt.com 了解產品保固範圍和更多服務訊息

SUPPORT AND SERVICE

Support and service
If you have any questions or problems with the NZXT product you purchased, please don't hesitate to contact us using our support system. support.nzxt.com
Please include a detailed explanation of your problem and your proof of purchase. For comments and suggestions, you can e-mail our design team, designer@nzxt.com. Lastly we would like to thank you for your support by purchasing this product.
For more information about NZXT, please visit us online. NZXT Website: nzxt.com

Soporte y servicio
Si tiene preguntas o problemas con el producto NZXT que usted compró, no dure en ponerse en contacto con service@nzxt.com y suministrar una explicación detallada de su problema así como su prueba de compra. Puede hacer consultas sobre piezas de repuesto en support.nzxt.com. Para comentarios y sugerencias, escriba un mensaje de correo electrónico a nuestro equipo de diseño: designer@nzxt.com. Gracias por comprar un producto NZXT. Para más información acerca de NZXT, visítenos en línea. Página web de NZXT: nzxt.com

Support et service
Si vous avez des questions ou des problèmes avec le produit NZXT que vous avez acheté, n'hésitez pas à contacter service@nzxt.com avec une description détaillée de votre problème et votre preuve d'achat. Vous pouvez aussi commander des pièces de remplacement auprès support.nzxt.com. Pour les commentaires et les suggestions, envoyez un email à notre équipe de design, designer@nzxt.com. Merci d'avoir acheté ce produit de NZXT. Pour plus d'informations sur NZXT, visitez notre site Web. Site Web de NZXT : nzxt.com

Kundendienst und service
Falls Fragen oder Probleme bezüglich Ihres NZXT-Produktes auftreten, wenden Sie sich bitte mit einer detaillierten Problembeschreibung und Ihrem Kaufbeleg an service@nzxt.com. Ersatzteile können Sie unter support.nzxt.com anfragen. Kommentare und Anregungen senden Sie bitte per designer@nzxt.com an unser Designteam. Vielen Dank, dass Sie ein NZXT-Produkt erworben haben. Weitere Informationen über NZXT erhalten Sie im Internet. NZXT-Webseite: nzxt.com

Assistenza e servizio
In caso di dubbi o problemi con il prodotto NZXT acquistato, non esitate a contattarci utilizzando il nostro sistema di assistenza. support.nzxt.com
Includere una spiegazione dettagliata del problema e la prova di acquisto. Per commenti e suggerimenti, siete pregati di inviare un messaggio al nostro team di progettisti, all'indirizzo: designer@nzxt.com. Infine, vogliamo ringraziarvi del vostro supporto con l'acquisto di questo prodotto. Per altre informazioni su NZXT, visitate il nostro sito. Sito NZXT: nzxt.com

Assistência e manutenção
Caso tenha questões ou problemas com o produto NZXT adquirido, não hesite em contactar-nos através do endereço service@nzxt.com fornecendo a explicação detalhada do seu problema e a prova de compra. Poderá solicitar peças de substituição através do endereço support.nzxt.com. Para comentários e sugestões, contacte a nossa equipa de design através do endereço de e-mail, designer@nzxt.com. Obrigado por ter adquirido um produto NZXT. Para mais informações acerca da NZXT, visite-nos online. Web site da NZXT: nzxt.com

Служба поддержки и обслуживания
В случае возникновения вопросов или неисправностей в приобретенных вами продуктах NZXT обращайтесь по адресу: service@nzxt.com с подробным описанием проблемы и подтверждением покупки. О наличии запчастей можно узнать, обратившись по адресу: support.nzxt.com. Замечания и предложения отправляйте в адрес нашей группы разработчиков: designer@nzxt.com. Благодарим вас за покупку продукта NZXT. Более подробная информация о компании NZXT представлена на наших веб-сайтах. Веб-сайт NZXT: nzxt.com

지원 및 서비스
구입한 NZXT 제품과 관련하여 질문 또는 문제가 있을 경우, 당사의 지원 시스템(support.nzxt.com)을 사용하여 문의하십시오. 문제를 자세히 기술하고 구매 증빙을 제출하십시오. 의견 또는 제안 사항이 있을 경우 당사 설계 팀에 designer@nzxt.com으로 이메일을 보내십시오. 마지막으로 이 제품을 구입하여 당사를 응원해 주셔서 감사합니다. NZXT에 대해 자세히 알려면 온라인으로 방문하십시오. NZXT 웹사이트: nzxt.com

サポートおよびサービス
購入されましたNZXTの製品に関するご質問または問題は、問題の詳細および購入の証明を添えて、ご遠慮なくservice@nzxt.comまでご連絡ください。 交換部品はsupport.nzxt.comまでお尋ねください。ご意見およびご提案は弊社設計チーム、designer@nzxt.com までメールを送信してください。NZXT製品をご購入いただきましてありがとうございます。 NZXTに関する詳細は、インターネット上のウェブサイトをご覧ください。NZXT ウェブサイト: nzxt.com

支持和服务
如果有任何疑问或者在使用 NZXT 产品的过程中遇到任何问题,欢迎联络 service@nzxt.com,联络时请提供关于问题的详细说明及购买凭证。您可以向 support.nzxt.com 查询更换部件。如有任何意见或建议,欢迎致信我们的设计团队,电子邮件地址是 designer@nzxt.com。感谢您购买 NZXT 产品。有关 NZXT 的更多信息,请造访我们的在线网站。NZXT 网站：nzxt.com

支援和服務
如果在使用NZXT 產品的過程中有遇到任何問題或疑問，歡迎聯繫 service@nzxt.com， 並請提供問題的詳細敘述及購買證明。您可以透過 support.nzxt.com 查詢更換部件。如有任何意見或建議，歡迎來信與設計團隊聯繫 designer@nzxt.com。最後，感謝您購買 NZXT 產品。有關 NZXT 的更多信息，請訪問我們的網站。NZXT 網站：nzxt.com

nzxt.com
For more building tips and information, visit: blog.nzxt.com
NZXT Europe GmbH
Industieiring Ost 66 47906 Kempen Germany

NZXT, Inc.
13164 E Temple Ave, City of Industry, CA 91746, USA