mm [inch]

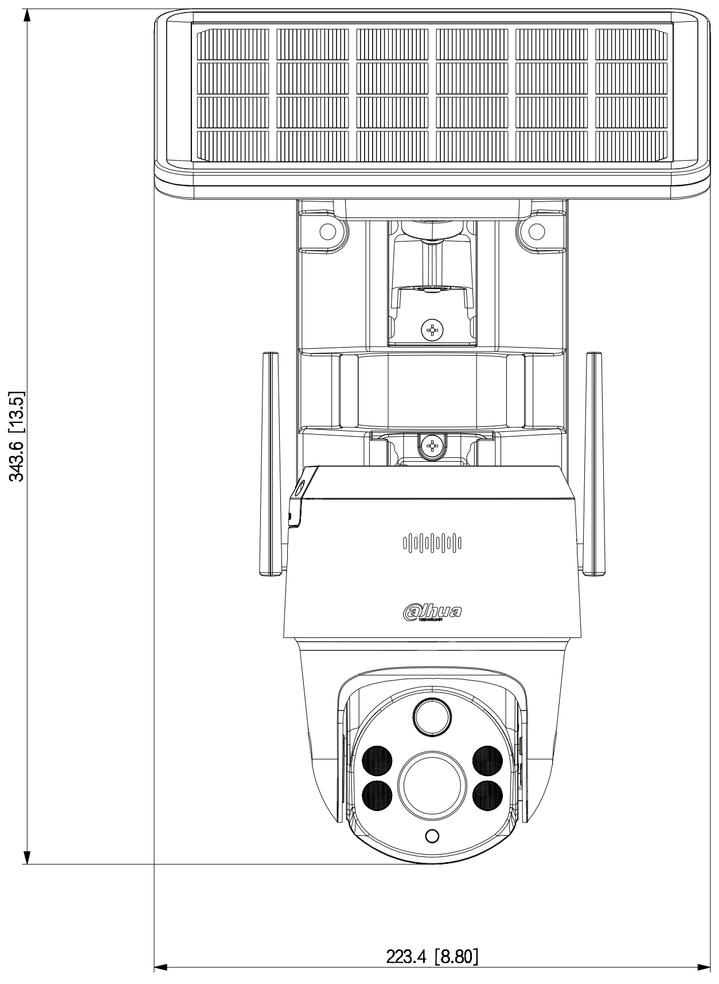
343.6 [13.5]
223.4 [8.80]

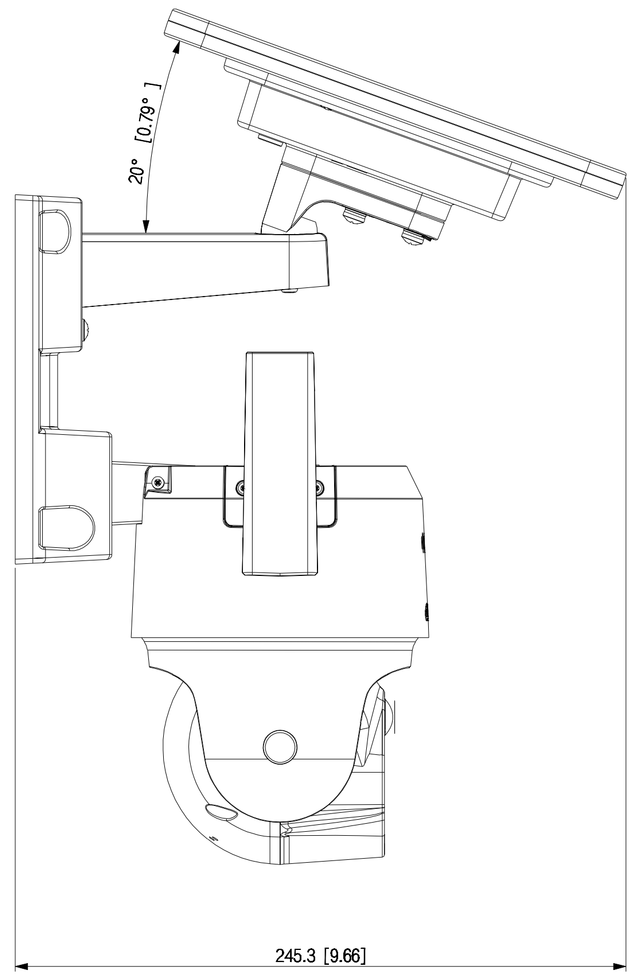
20° [0.79°]
245.3 [9.66]

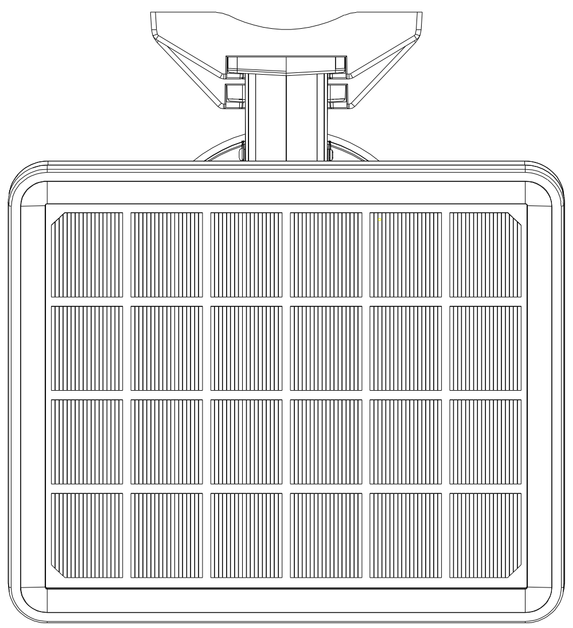

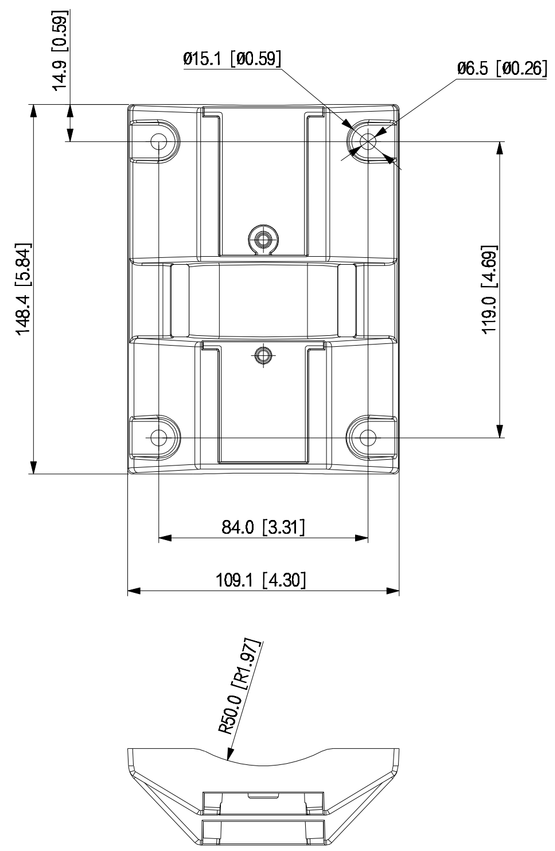
14.9 [0.59]
Ø15.1 [Ø0.59]
Ø6.5 [Ø0.26]
148.4 [5.84]
119.0 [4.69]
84.0 [3.31]
109.1 [4.30]
R50.0 [R1.97]

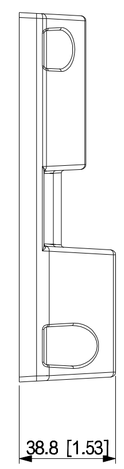
38.8 [1.53]